437 Imp. Gallons
1987 Liters
140 lbs

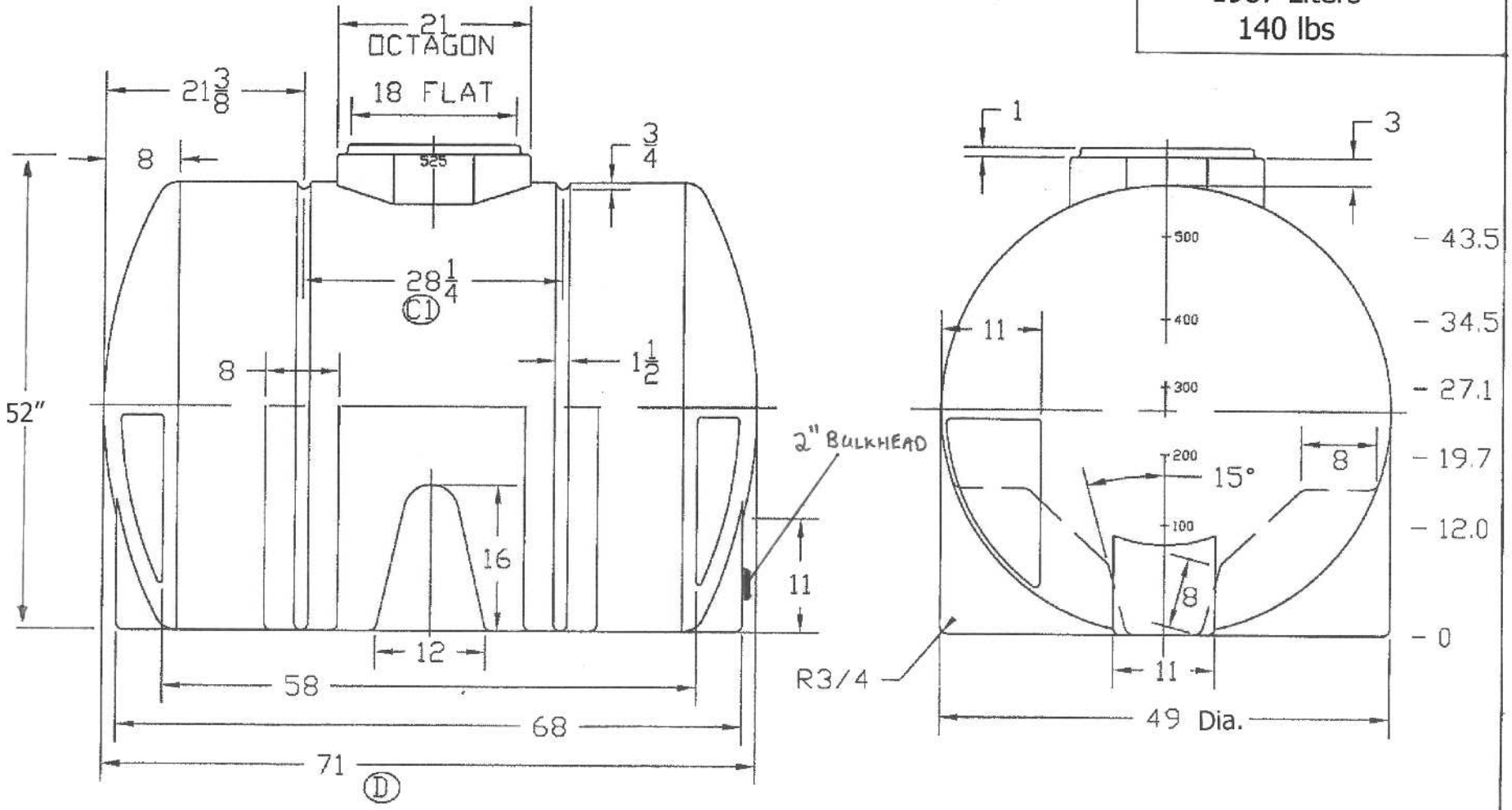

NOTE: GALLONAGE MARKS BOTH ENDS

Twin Maple Industrial Tanks
32351 Huntingdon Road
Abbotsford, B.C., V2T 5Y8
(604) 854 6776 Fax: (604) 854 3223
Toll Free: 1(800) 663 8898

525 GAL HORIZONTAL TANK

Premium Part # 40181
Heavy Duty Part # 40193