7,497 Imp. Gal.
34,065 Liters
1,700 lbs

APPROVED

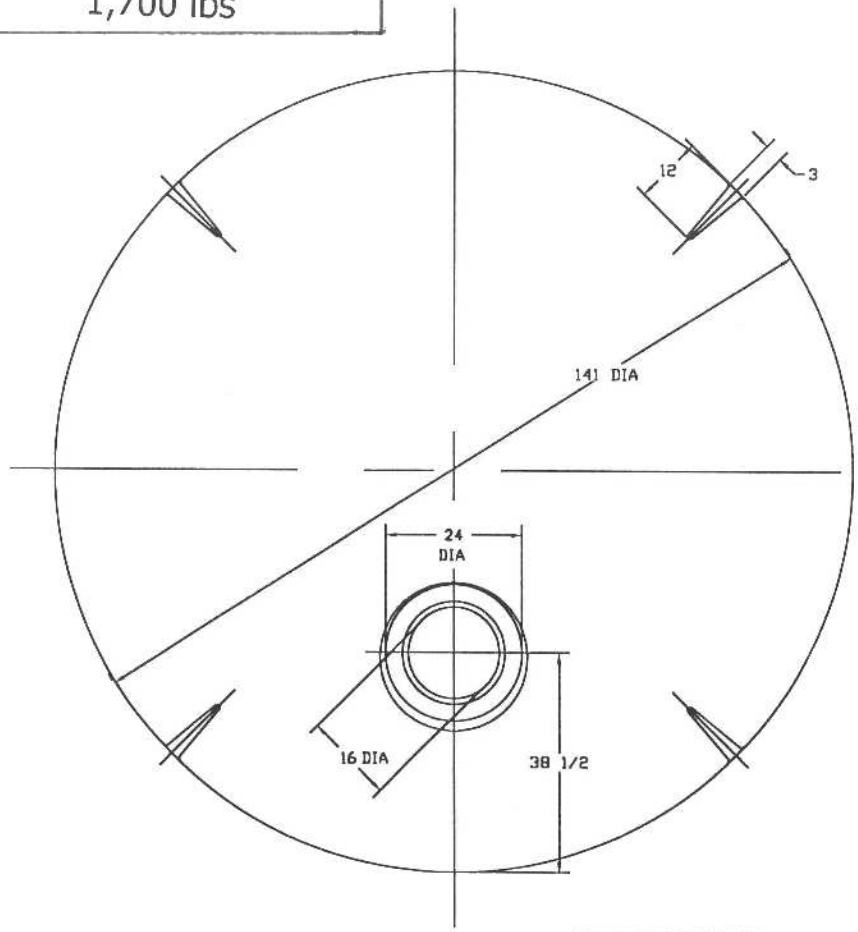

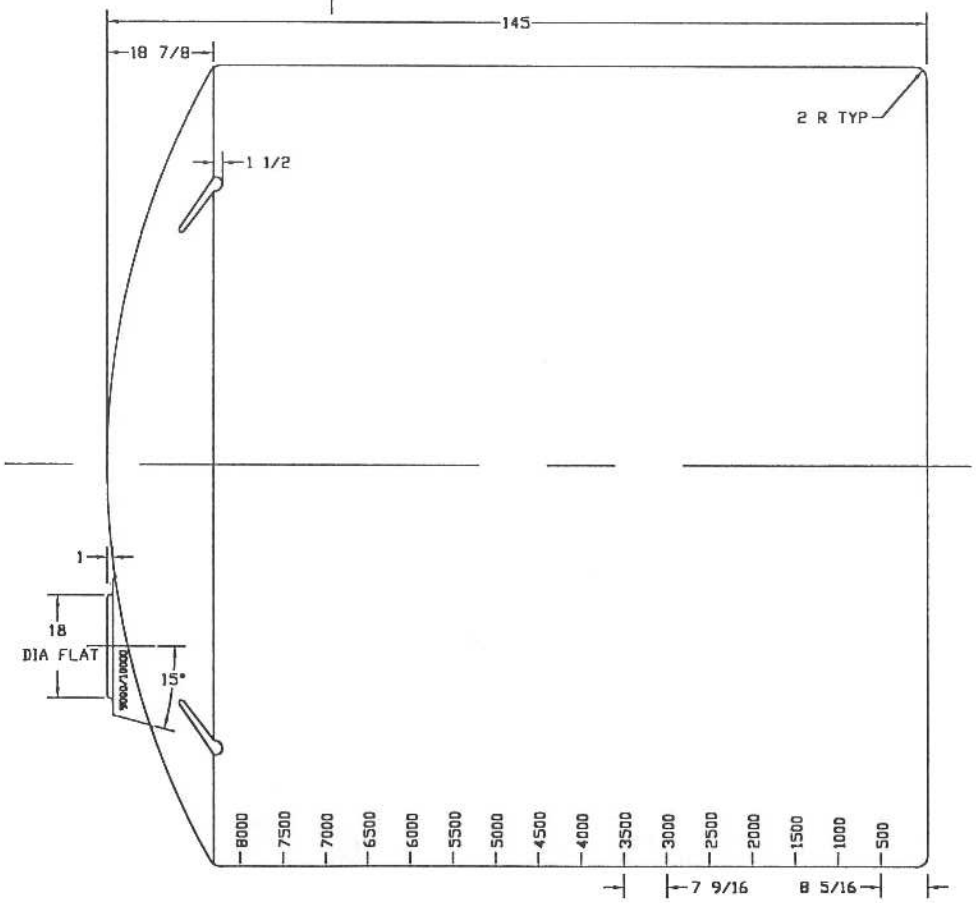

32351 Huntingdon Road
Abbotsford, B.C., V2T 5Y8
(604) 854 6776 Fax: (604) 854 3223
1(800)663 8898

40543 – Premium White
40231 – Heavy Duty Light Blue

JTP 06DEC93

Twin Maple Industrial Tanks

9000 GALLON VERTICAL TANK

SIZE	FSCM NO.	DWG NO.	REV
B		40543	