REVISIONS				
ZONE	REV	DESCRIPTION	DATE	APPROVED

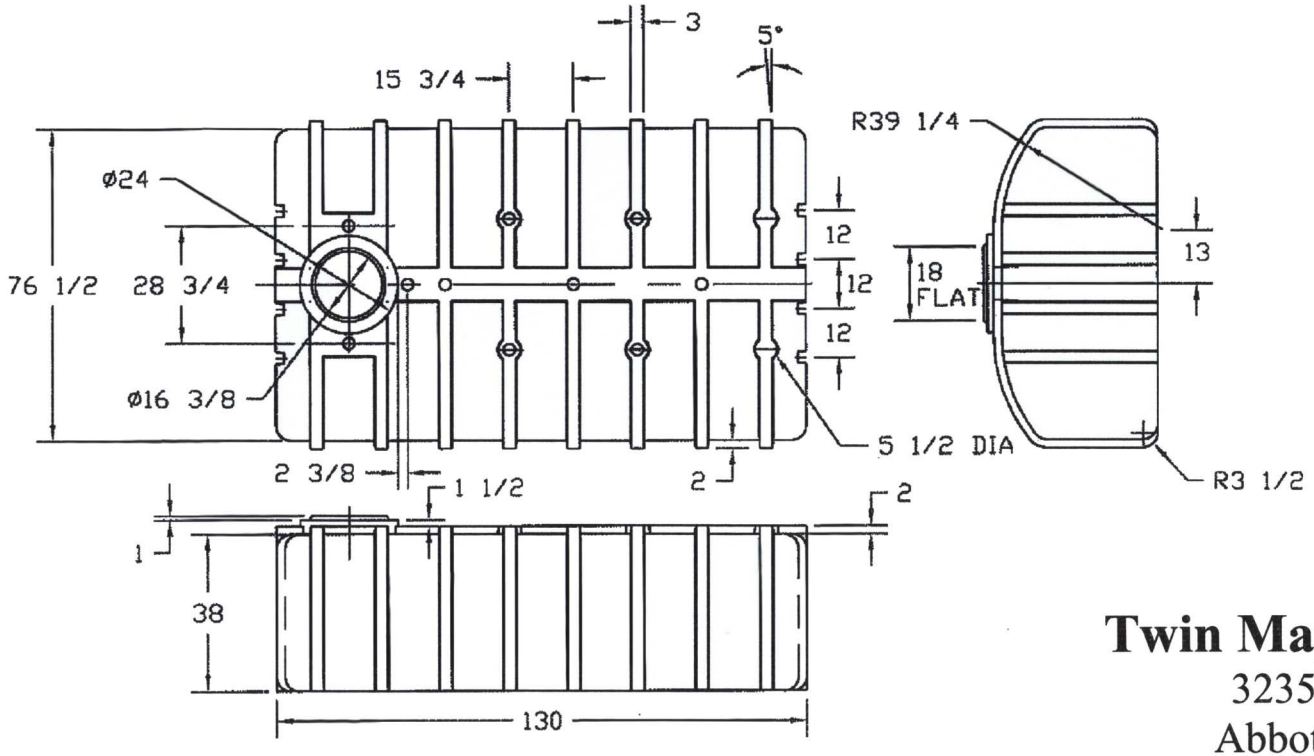

NOTES:
1. END RIBS 3"W X 2" DEEP

Twin Maple Industrial Tanks

32351 Huntingdon Road
Abbotsford, BC V2T 5Y8
(800) 663-8898 Fax: (604) 854-3223

PART # 41392

1250 IMP. Gallons = 5678 LITERS